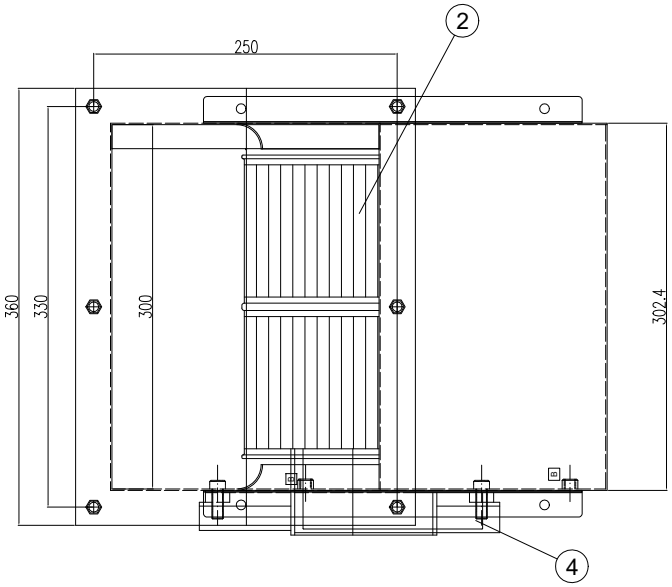

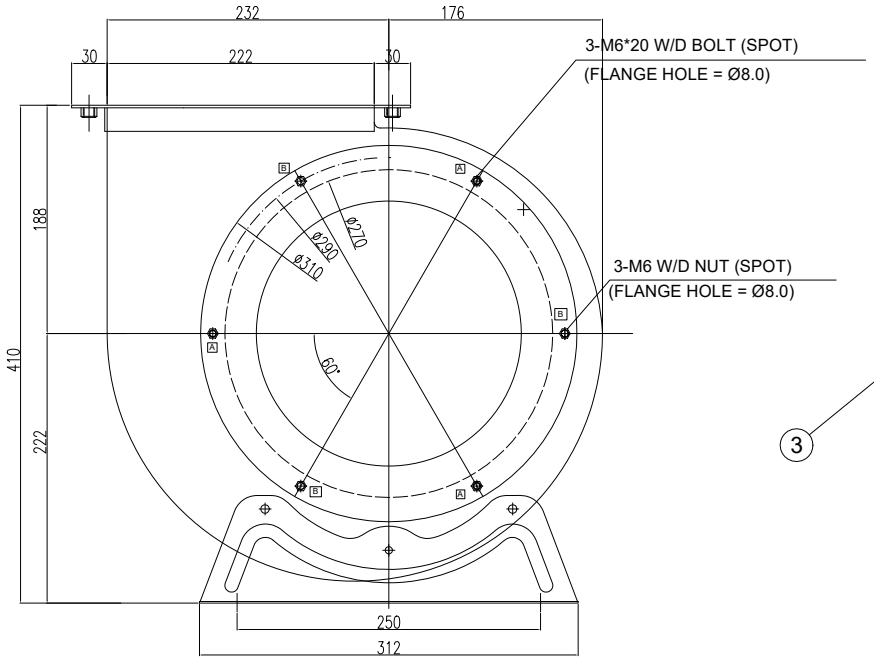

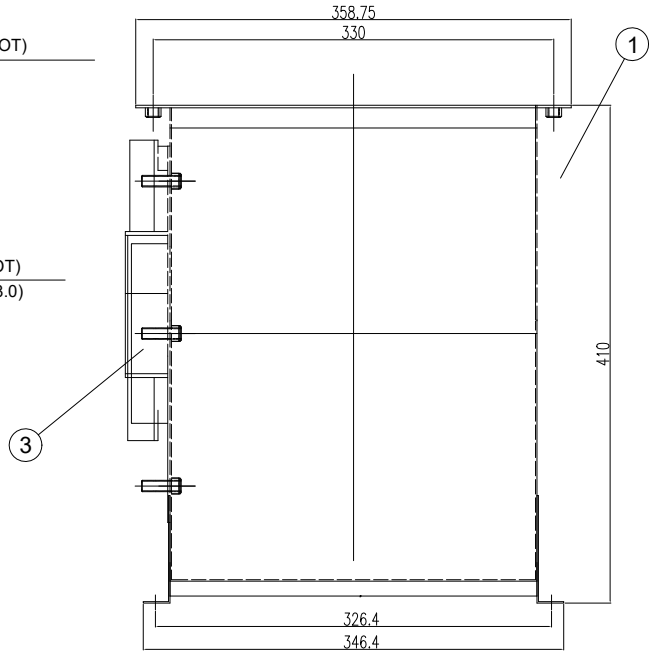

ITEM			
	Location	–	
	Service	–	
	Equip No.	1	
	Fan Model	DR–DS1010	
F A N		MOTOR (60 Hz)	
AIR VOLUME	– m^3/min	POWER	0.9 Kw
STATIC PRESSURE	SUC – mmAq	VOLTAGE	220 V
	DIS – mmAq	PHASE	1 Ph
OPERATING FLUID AIR	(At)20°C	POLSE	6 P
REVOLUTION	955 R.P.M	REVOLUTION	955 R.P.M
BEARING	in side –	PULLEY	fan –ty –p – "
	out side –		motor –ty –p – "
COLOR	casing	–	
	belt cover	–	
QUANTITY	– EA	V–VELT LENGTH	– "

ITEM NO.	NOMENCLATURE	MATERIAL	SIZE	QUAN'T	REMARK
7	–			–	
6	–			–	
5	–			–	
4	Motor Support			1	
3	Motor			1	
2	Impeller			1	
1	Casing	–		1	

NO.	DATE	REVISION & DESCRIPTION	REVIEWED	CHECKED
⚠				

대 륜 산 업 (주)

SCALE N/S	DWG. BY	DES'N BY	CH'D BY	APPROVE
UNIT mm	–			
DWG DATE : 2019.09.03				

High–pressure multilevel blowers

PROJECT	–
CUSTOMER	–
DWG CODE	–