ITEM		
	Location	–
	Service	–
	Equip No.	1
	Fan Model	DR–F25ASV

F A N			MOTOR (60 Hz)		
AIR VOLUME	–	m^3/min	POWER	0.65	Kw
STATIC	SUC –	mmAq	VOLTAGE	220	V
PRESSURE	DIS –	mmAq	PHASE	1	Ph
OPERATING FLUID AIR		(At)20°C	POLSE	4	P
REVOLUTION		1510 R.P.M	REVOLUTION	1510	R.P.M
BEARING	in side	–	PULLEY	fan –ty –p	– ”
	out side	–		motor –ty –p	– ”
COLOR	casing		–		
	belt cover		–		
QUANTITY	–	EA	V–VELT LENGTH	–	”

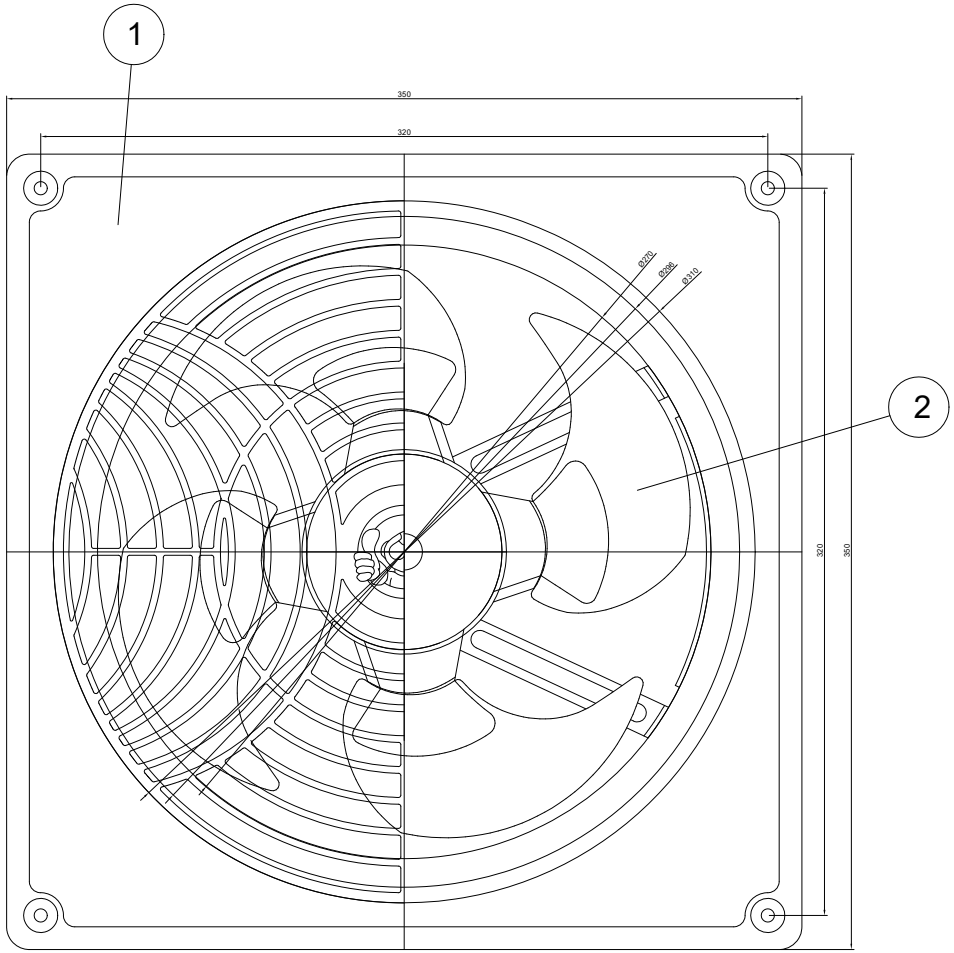

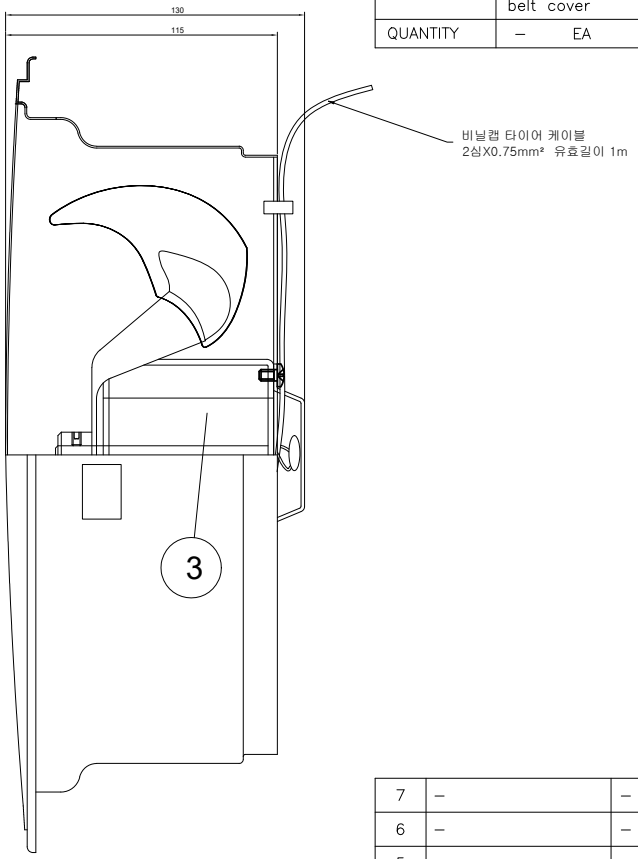

ITEM NO.	NOMENCLATURE	MATERIAL	SIZE	QUAN'T	REMARK
7	–	–		–	
6	–	–		–	
5	–	–		–	
4	–	–		–	
3	Motor			1	
2	Impeller			1	
1	Casing	SPCC		1	

NO.	DATE	REVISION & DESCRIPTION	REVIEWED	CHECKED
⚠				

대 륜 산 업 (주)

SCALE N/S	DWG. BY	DES'N BY	CH'D BY	APPROVE
UNIT mm	–			
DWG DATE : 2019.09.03				

High–pressure multilevel blowers

PROJECT	–
CUSTOMER	–
DWG CODE	–