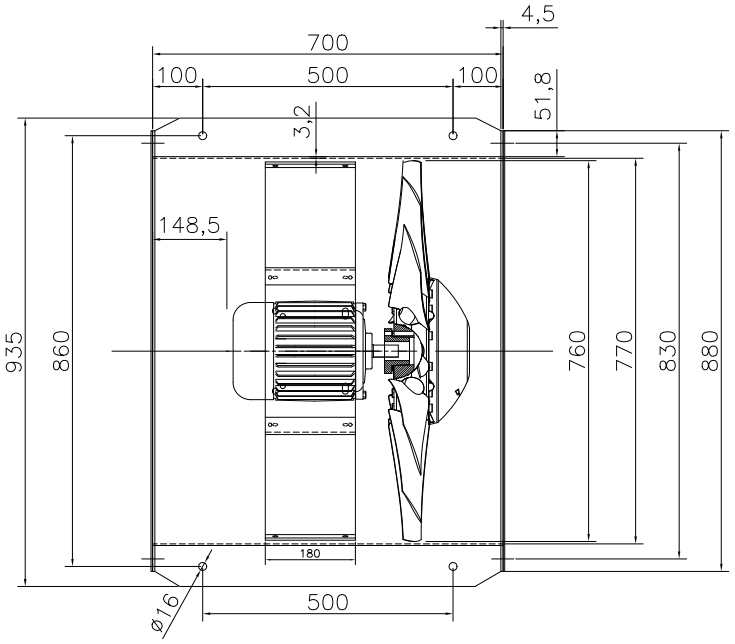

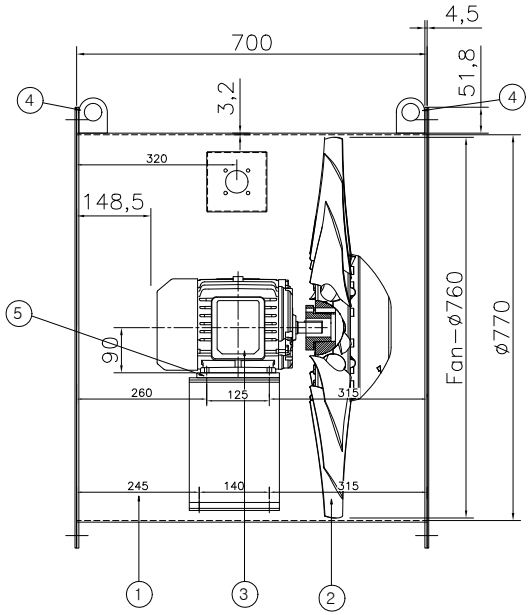

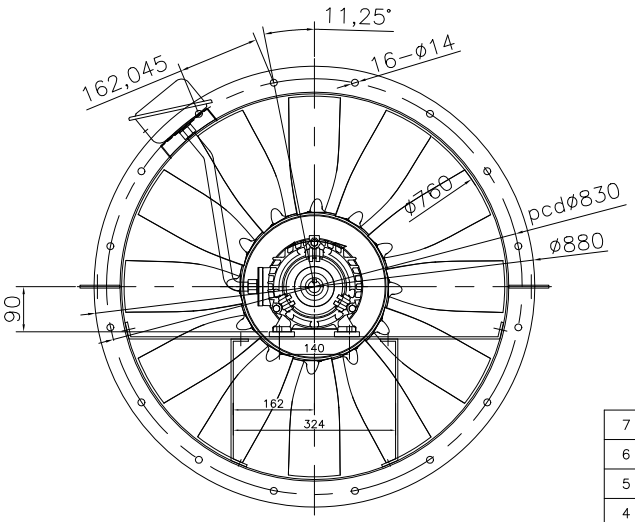

ITEM			
	Location	–	
	Service	–	
	Equip No.	–	
	Fan Model	DR-FXA760TP	
F A N		MOTOR (– Hz)	
AIR VOLUME	– m^3/min	POWER	– Kw
STATIC PRESSURE	SUC – mmAq	VOLTAGE	– V
	DIS – mmAq	PHASE	3 Ph
OPERATING FLUID AIR	(At)20°C	POLSE	– P
REVOLUTION	– R.P.M	REVOLUTION	– R.P.M
BEARING	in side –	PULLEY	fan – ty – p – "
	out side –		motor – ty – p – "
COLOR	casing	GRAY	
	belt cover	–	
QUANTITY	– EA	V-VELT LENGTH	– "

ITEM NO.	NOMENCLATURE	MATERIAL	SIZE	QUAN'T	REMARK
7	–	–		–	
6	–	–		–	
5	–	–		–	
4	Companion Flange	SPHC		4	
3	Motor		3Hp	1	
2	Impeller	AL		1	
1	Casing	SPHC		1	

도면코드	XA760G2S090100			
⚠				
NO.	DATE	REVISION & DESCRIPTION	REVIEWED	CHECKED

대 륜 산 업 (주)

SCALE N/S	DWG. BY	DES'N BY	CH'D BY	APPROVE
UNIT mm	Baky.s			

DWG DATE : 2020.05.12

AXIAL FAN

PROJECT	–
CUSTOMER	–
DWG CODE	–

90L/100L 모터공용