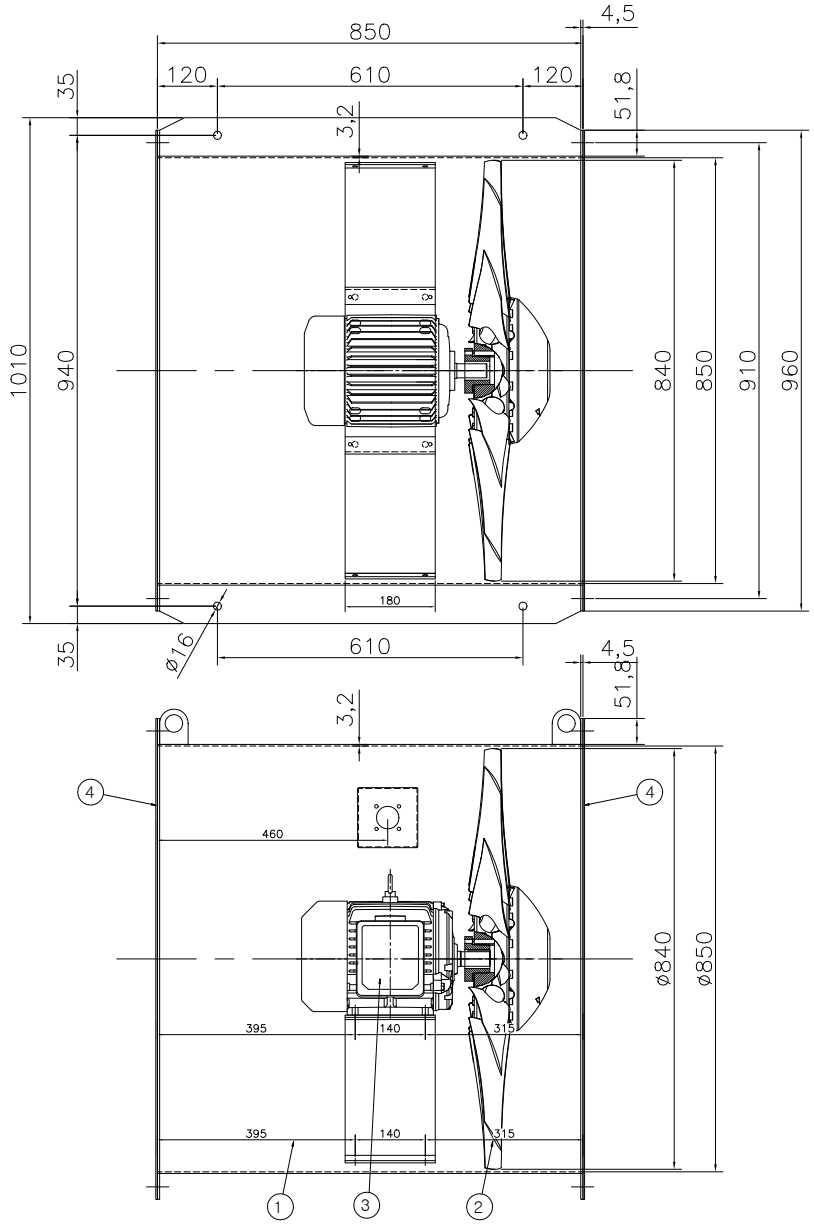


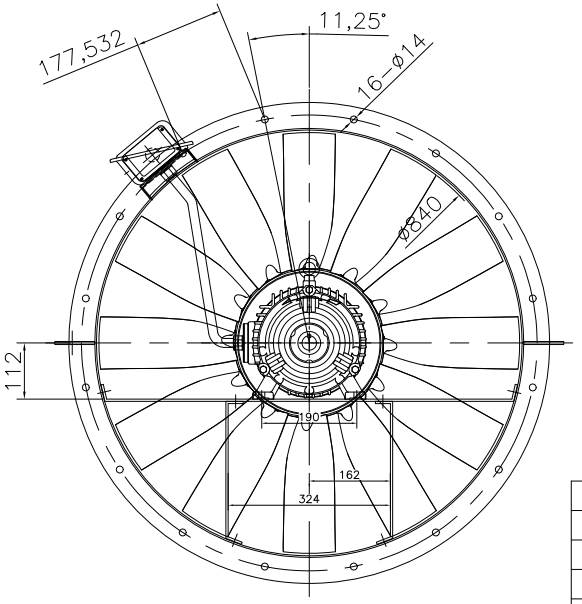


| ITEM | | |
|---|---|---|
| | Location | – |
| | Service | – |
| | Equip No. | – |
| | Fan Model | DR-F/GXA840TP |

| F A N | | MOTOR ( – Hz) | |
|---|---|---|---|
| AIR VOLUME | – m³/min | POWER | – Kw |
| STATIC PRESSURE | SUC – mmAq | VOLTAGE | – V |
| | DIS – mmAq | PHASE | 3 Ph |
| OPERATING FLUID AIR | (At)20°C | POLSE | – P |
| REVOLUTION | – R.P.M | REVOLUTION | – R.P.M |
| BEARING | in side – | PULLEY | fan – ty – p – " |
| | out side – | | motor – ty – p – " |
| COLOR | casing | GRAY | |
| | belt cover | – | |
| QUANTITY | – EA | V-VELT LENGTH | – " |

| ITEM NO. | NOMENCLATURE | MATERIAL | SIZE | QUAN'T | REMARK |
|---|---|---|---|---|---|
| 7 | – | – | | – | |
| 6 | – | – | | – | |
| 5 | – | – | | – | |
| 4 | Companion Flange | SPHC | | 4 | |
| 3 | Motor | | 5Hp | 1 | |
| 2 | Impeller | AL | | 1 | |
| 1 | Casing | SPHC | | 1 | |

| 도면코드 | XA840G2S100112 | | | |
|---|---|---|---|---|
| | | | | |
| ⚠ | | | | |
| NO. | DATE | REVISION & DESCRIPTION | REVIEWED | CHECKED |

대 륜 산 업 (주)

| SCALE N/S | DWG. BY | DES'N BY | CH'D BY | APPROVE |
|---|---|---|---|---|
| UNIT mm | Baky.s | | | |

DWG DATE : 2020.05.12

| | |
|---|---|
| AXIAL FAN | |
| PROJECT | – |
| CUSTOMER | – |
| DWG CODE | – |

100L/112M 모터공용