ITEM			
	Location	–	
	Service	–	
	Equip No.	1	
	Fan Model	DR–GD23DS	

F A N			MOTOR (60 Hz)	
AIR VOLUME	–	m³/min	POWER	0.45 Kw
STATIC	SUC –	mmAq	VOLTAGE	220 V
PRESSURE	DIS –	mmAq	PHASE	1 Ph
OPERATING FLUID AIR		(At)20°C	POLSE	6 P
REVOLUTION		1110 R.P.M	REVOLUTION	1110 R.P.M
BEARING	in side	–	PULLEY	fan – ty – p – ”
	out side	–		motor – ty – p – ”
COLOR	casing		–	
	belt cover		–	
QUANTITY	–	EA	V–VELT LENGTH	– ”

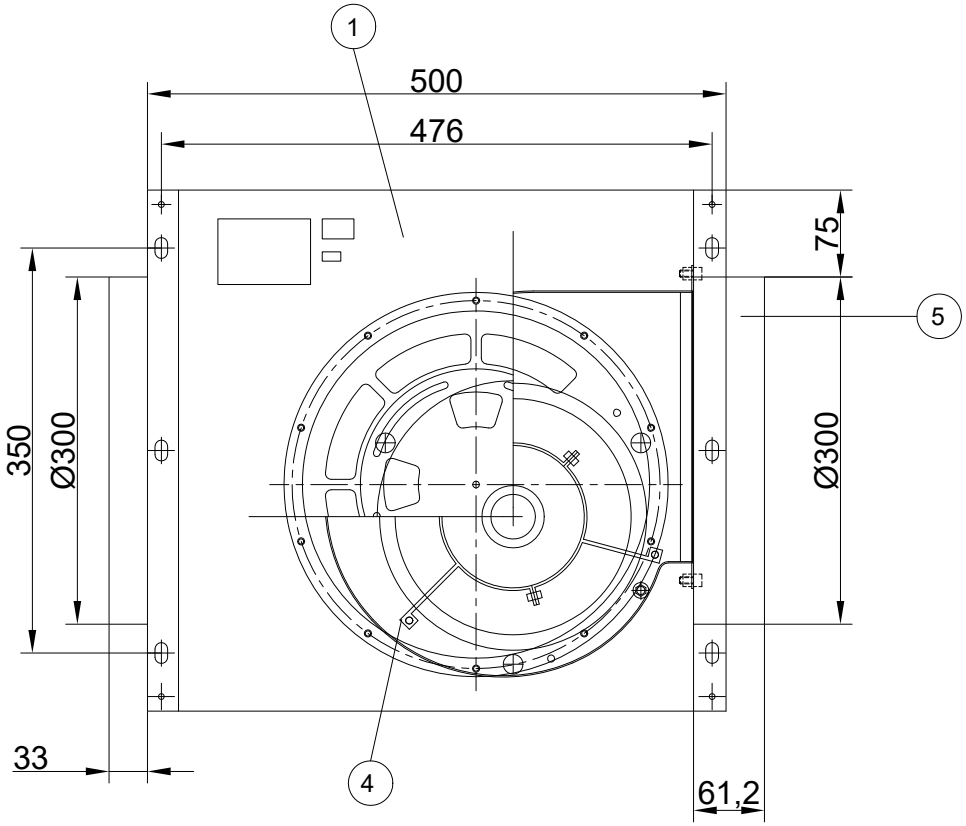

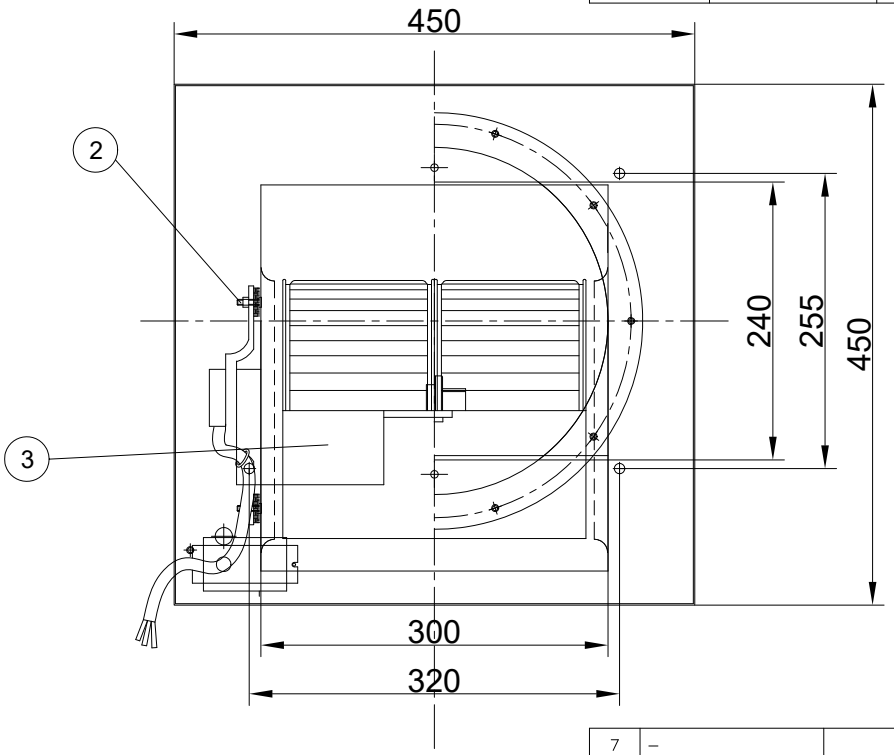

ITEM NO.	NOMENCLATURE	MATERIAL	SIZE	QUAN'T	REMARK
7	–			–	
6	–			–	
5	Duct Flange	–		2	
4	Motor Support	SS41		1	
3	Motor			1	
2	Impeller	–		1	
1	Casing	–		1	

NO.	DATE	REVISION & DESCRIPTION	REVIEWED	CHECKED
1				

대 륜 산 업 (주)

Double Suction Straight Sirocco Fan

SCALE N/S	DWG. BY	DES'N BY	CH'D BY	APPROVE
UNIT mm	–			
DWG DATE : 2020.08.05				

PROJECT	–
CUSTOMER	–
DWG CODE	–