ITEM			
	Location	–	
	Service	–	
	Equip No.	1	
	Fan Model	DR–GD25DT	
F A N		MOTOR (60 Hz)	
AIR VOLUME	– m³/min	POWER	0.9 Kw
STATIC	SUC – mmAq	VOLTAGE	220/380 V
PRESSURE	DIS – mmAq	PHASE	3 Ph
OPERATING FLUID AIR	(At)20°C	POLSE	6 P
REVOLUTION	1110 R.P.M	REVOLUTION	1110 R.P.M
BEARING	in side –	PULLEY	fan –ty –p – ”
	out side –		motor –ty –p – ”
COLOR	casing	–	
	belt cover	–	
QUANTITY	– EA	V–VELT LENGTH	– ”

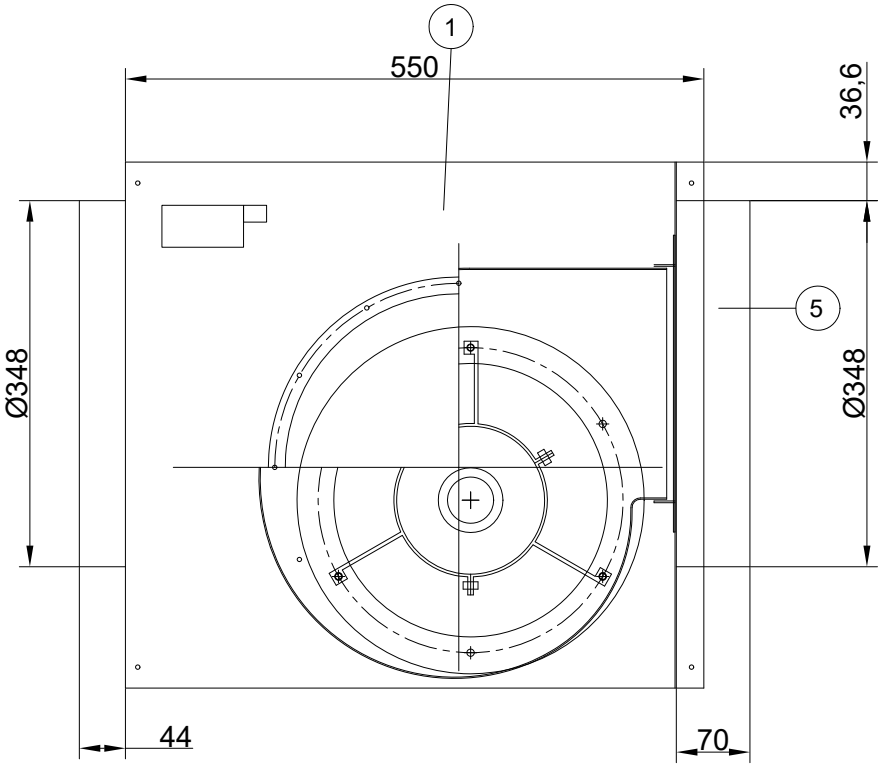

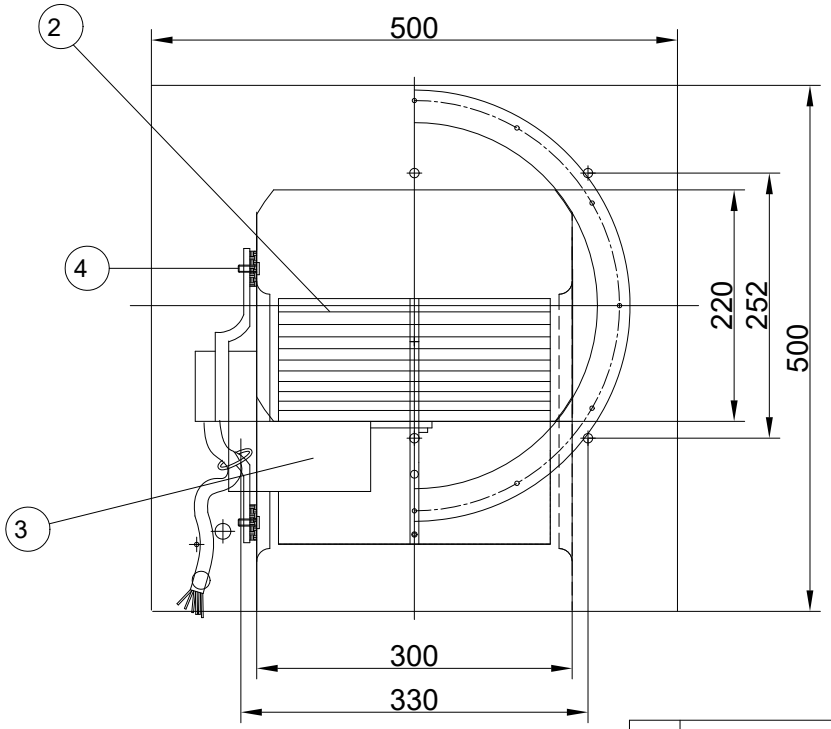

ITEM NO.	NOMENCLATURE	MATERIAL	SIZE	QUAN'T	REMARK
7	–			–	
6	–			–	
5	Duct Flange	SPCC		2	
4	Motor Support	SS41		1	
3	Motor			1	
2	Impeller	–		1	
1	Casing	–		1	

NO.	DATE	REVISION & DESCRIPTION	REVIEWED	CHECKED
1				

대 륜 산 업 (주)

Sirocco In–line Fan

SCALE N/S	DWG. BY	DES'N BY	CH'D BY	APPROVE
UNIT mm	–			

DWG DATE : 2020.08.05

PROJECT	–
CUSTOMER	–
DWG CODE	–