REVOLUTION		341
BEARING	in side	
	out side	
COLOR	casing	
	belt cover	
QUANTITY	–	EA

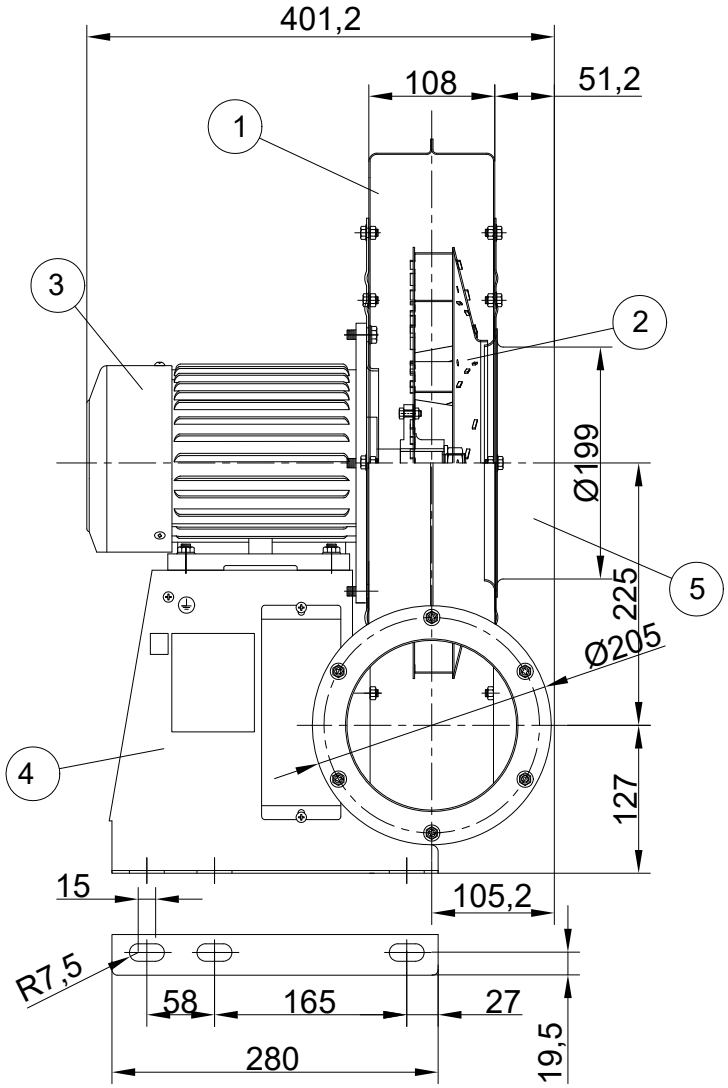

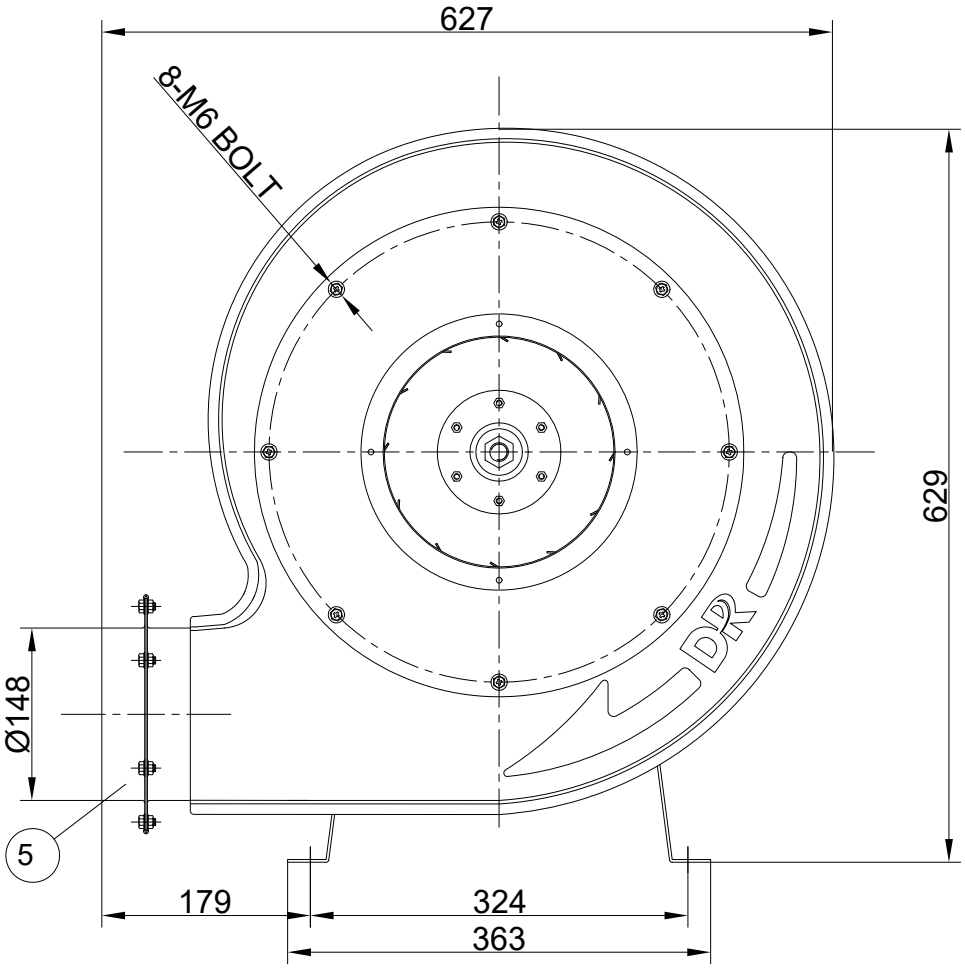

ITEM NO.	NOMENCLATURE
7	–
6	–
5	Duct Flange
4	Motor Support
3	Motor
2	Impeller
1	Casing

NO.	DATE	REVISION & DESCRIPTION	REVIEWED	CHECKED
1				

대 륜 산 업

SCALE N/S	DWG. BY	DES'N BY	CH'D B
UNIT mm	–		

DWG DATE : 2019.09.